KENDRIYA VIDYALAYA GACHIBOWLI, GPRA CAMPUS, HYD–32

SAMPLE PAPER 09 (2019-20)

SUBJECT: MATHEMATICS(241) (BASIC)

BLUE PRINT : CLASS X

Unit	Chapter	MCQ (1 mark)	FIB (1 mark)	VSA (1 mark)	SA–I (2 marks)	SA–II (3 marks)	LA (4 marks)	Total	Unit Total
Number system	**Real Numbers**	3(3)	--	--	--	**3(1)***	--	**6(4)**	**6(4)**
Algebra	**Polynomials**	2(2)	--	--	2(1)	3(1)	--	**7(4)**	**20(9)**
	Pair of Linear Equations in two variables	--	**1(1)***	--	--	3(1)	--	**3(1)**	
	Quadratic Equations	--		--	--	--	4(1)	**5(2)**	
	Arithmetic progression	--	--	1(1)	--	--	**4(1)***	**5(2)**	
Coordinate Geometry	**Coordinate Geometry**	2(2)	1(1)	--	--	**3(1)****	--	**6(4)**	**6(4)**
Trigonometry	**Introduction to Trigonometry**	--	2(2)	**1(1)***	**2(1)***	**3(1)***	--	**8(5)**	**12(6)**
	Some Applications of Trigonometry	--	--	--	--	--	4(1)	**4(1)**	
Geometry	**Triangles**	--	1(1)	1(1)	--	--	**4(1)***	**6(3)**	**15(7)**
	Circles	1(1)	--	--	2(1)	3(1)	--	**6(3)**	
	Constructions	--	--	--	--	**3(1)***	--	**3(1)**	
Mensuration	**Areas Related to Circles**	--	--	1(1)	2(1)	3(1)	--	**6(3)**	**10(4)**
	Surface Areas and Volumes	--	--	--	--	--	**4(1)***	**4(1)**	
Statistics & probability	**Statistics**	1(1)	--	--	--	--	4(1)	**5(2)**	**11(6)**
	Probability	1(1)	--	1(1)	2(1) **2(1)***	--	--	**6(4)**	
	Total	**10(10)**	**5(5)**	**5(5)**	**12(6)**	**24(8)**	**24(6)**	**80(30)**	**80(40)**

Note: * - Internal Choice Questions and Yellow shaded with ** - PISA type questions

KENDRIYA VIDYALAYA GACHIBOWLI, GPRA CAMPUS, HYD–32

SAMPLE PAPER 09 (2019-20)

SUBJECT: MATHEMATICS **MAX. MARKS : 80**

CLASS : X **DURATION : 3 HRS**

General Instruction:

(i) All the questions are compulsory.

(ii) The question paper consists of 40 questions divided into 4 sections A, B, C, and D.

(iii) **Section A** comprises of 20 questions of **1 mark** each. **Section B** comprises of 6 questions of **2 marks** each. **Section C** comprises of 8 questions of **3 marks** each. **Section D** comprises of 6 questions of **4 marks** each.

(iv) There is no overall choice. However, an internal choice has been provided in two questions of 1 mark each, two questions of 2 marks each, three questions of 3 marks each, and three questions of 4 marks each. You have to attempt only one of the alternatives in all such questions.

(v) Use of calculators is not permitted.

SECTION – A

Questions 1 to 20 carry 1 mark each.

1. LCM of 6 and 20 is

(a) 30 (b) 60 (c) 120 (d)none of these

2. $\sqrt{5}-3-2$ is

(a) a rational number (b) a natural number (c) equal to zero (d) an irrational number

3. If p is a prime number and p divides k^2, then p divides:

(a) $2k^2$ (b) k (c) 3k (d) none of these

4. If α, β are the zeroes of the polynomials f(x) = x^2 + 5x + 8, then $\alpha+\beta$

(a) 5 (b) –5 (c) 8 (d) none of these

5. Which of the following is not a polynomial?

$(a)\sqrt{3}x^2-2\sqrt{3}x+3$ $(b)\frac{3}{2}x^3-5x^2-\frac{1}{\sqrt{2}}x-1$ $(c)x+\frac{1}{x}$ $(d)5x^2-3x+\sqrt{2}$

6. Find the value of p for which the points A(–1, 3), B(2, p) and C(5, –1) collinear?

(a) 1 (b) –1 (c) 2 (d) –2

7. The distance between the points (0, 5) and (-5, 0) is:

(a) 5 (b) 52 (c) 25 (d) none of these

8. In the formula $\bar{x}=a+\frac{\sum f_i d_i}{\sum f_i}$, finding the mean of the grouped data, d_i's are deviations from assumed mean 'a' of

(a) lower limits of classes (b) upper limits of classes

(c) class marks (d) frequencies of the classes.

9. Cards are marked with numbers 1 to 25 are placed in the box and mixed thoroughly. What is the probability of getting an odd number?

(a) 1 (b) 0 (c) $\frac{12}{25}$ (d) $\frac{13}{25}$

10. PT is tangent to a circle with centre O, OT = 56 cm, TP = 90 cm, find OP
(a) 104 cm (b) 107 cm (c) 106 cm (d) 105 cm

11. If the mid-point of the line segment joining the points P(6, b – 2) and Q(– 2, 4) is (2, – 3), then the value of b is _____

12. Given 15 cot A = 8, then sin A = _____

13. If ΔABC is right angled at B, then the value of cos(A + C) is _____

14. If the corresponding sides of two similar triangles are in the ratio 4 : 9, then the areas of these triangles are in the ratio is _____

15. If one root of the quadratic equation $6x^2 - x - k = 0$ is $\frac{2}{3}$, then the value of k is _____

OR

If 2x + 3y = 0 and 4x – 3y = 0, then x + y equals _____

16. If the perimeter of a semicircular protractor is 66 cm, find the radius of the protractor.

17. Gopi buys a fish from a shop for his aquarium. The shopkeeper takes out one fish at random from a tank containing 5 male fish and 8 female fish. What is the probability that the fish taken out is a male fish?

18. Find the 11th term from the last term of the AP : 10, 7, 4, . . ., – 62.

19. If $\tan 9\theta = \cot\theta$ and $9\theta < 90^0$, then find the value of $\operatorname{cosec} 5\theta$.

OR

In ΔPQR, right angled at Q, PQ = 3 cm and PR = 6 cm, find sin R.

20. In the fig., P and Q are points on the sides AB and AC respectively of ΔABC such that AP = 3.5 cm, PB = 7 cm, AQ = 3 cm and QC = 6 cm. I f PQ = 4.5 cm, find BC.

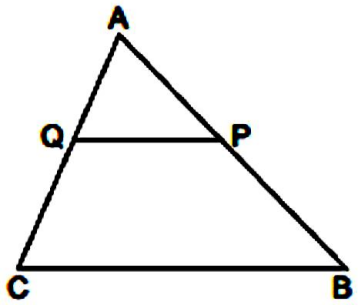

SECTION – B

Questions 21 to 26 carry 2 marks each.

21. A bag contains 5 red balls, 8 white balls, 4 green balls and 7 black balls. If one ball is drawn at random, find the probability that it is (i) black (ii) not red

OR

One card is drawn from a well-shuffled deck of 52 cards. Find the probability of drawing: (i) an ace (ii) '2' of spades

22. Two dice are rolled once. Find the probability of getting such numbers on two dice, whose sum is 7.

23. A chord of a circle of radius 14 cm subtends a right angle at the centre. What is the area of the minor sector?

24. Find the value of $(1 + \tan\theta + \sec\theta)(1 + \cot\theta - \operatorname{cosec}\theta)$.

OR

Prove that $\sec A(1 - \sin A)(\sec A + \tan A) = 1$.

25. Find a quadratic polynomial, whose zeroes are 3 and – 4.

26. In figure, AOB is a diameter of a circle with centre O and AC is a tangent to the circle at A. If BOC = 130°, then find ACO.

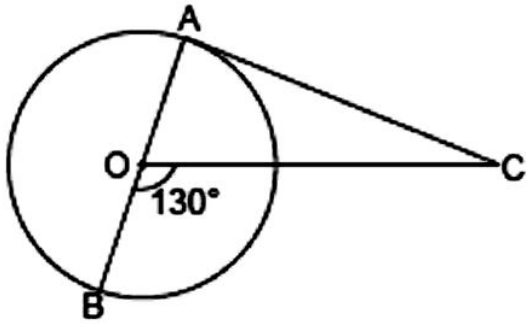

SECTION – C

Questions 27 to 34 carry 3 marks each.

27. Prove that $3 - 5\sqrt{2}$ is an irrational number.

OR

Find the HCF and LCM of 288, 360 and 384 by prime factorisation method.

28. Find the zeroes of $p(x) = x^2 - 7x + 12$ quadratic polynomials and verify the relationship between the zeroes and their coefficients.

29. Solve $2x + 3y = 7$ and $6x - 5y = 11$ and hence find the value of '*m*' for which $y = mx + 2$.

30. Find the area of the shaded design in below figure, where ABCD is a square of side 10 cm and semicircles are drawn with each side of the square as diameter. (Use $\pi = 3.14$)

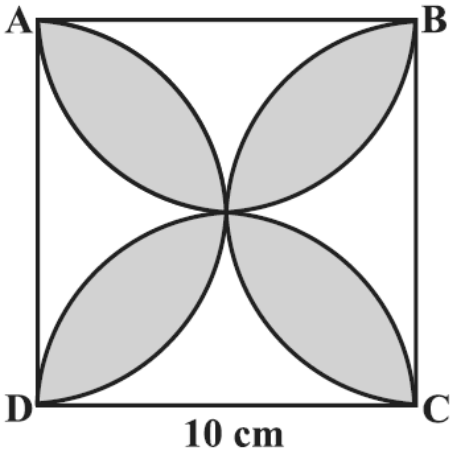

31. Draw a circle of radius 6 cm. From a point 10 cm away from its centre, construct the pair of tangents to the circle and measure their lengths.

OR

Draw a line segment of length 14 cm and divide it in the ratio 2 : 5. Measure the two parts.

32. In Δ OPQ, right-angled at P, OP = 7 cm and OQ – PQ = 1 cm. Determine the values of sin Q and cos Q.

OR

If A, B and C are interior angles of a triangle ABC, then show that $\sin\left(\frac{B+C}{2}\right) = \cos\frac{A}{2}$

33. Prove that the parallelogram circumscribing a circle is a rhombus.

34. The below figure shows the arrangement of desks in a classroom. Ashima, Bharti and Camella are seated at A, B and C respectively. Find the coordinate of their positions and also find in which type of triangle they are seated?

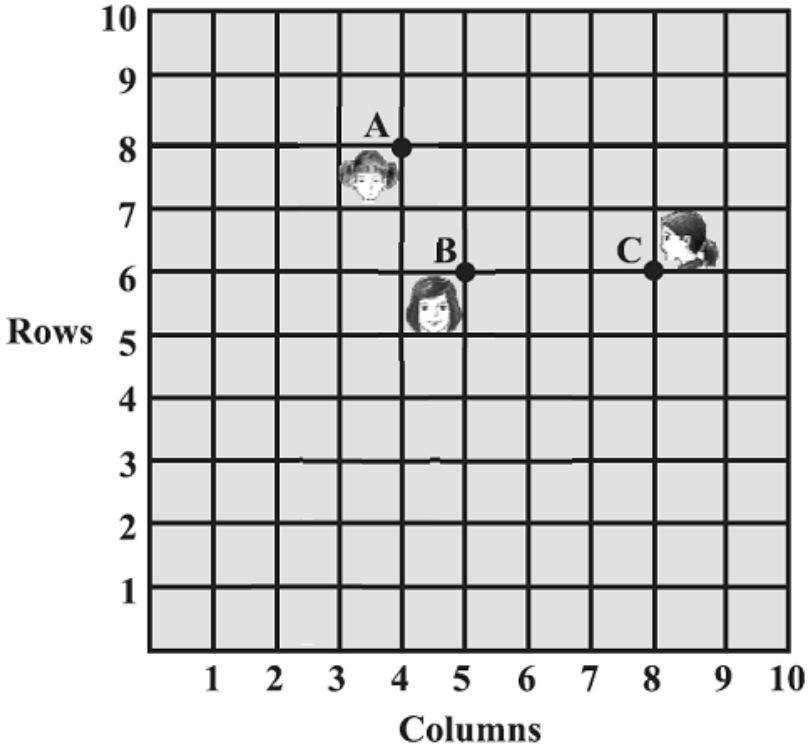

SECTION – D

Questions 35 to 40 carry 4 marks each.

35. The angles of elevation of the top of a tower from two points at a distance of 4 m and 9 m from the base of the tower and in the same straight line with it are complementary. Prove that the height of the tower is 6 m.

36. Two water taps together can fill a tank in $9\frac{3}{8}$ hours. The tap of larger diameter takes 10 hours less than the smaller one to fill the tank separately. Find the time in which each tap can separately fill the tank.

37. Prove that "The ratio of the areas of two similar triangles is equal to the square of the ratio of their corresponding sides."

OR

State and prove Basic proportionality theorem.

38. In a school, students thought of planting trees in and around the school to reduce air pollution. It was decided that the number of trees, that each section of each class will plant, will be the same as the class, in which they are studying, e.g., a section of Class I will plant 1 tree, a section of Class II will plant 2 trees and so on till Class XII. There are three sections of each class. How many trees will be planted by the students?

OR

In an AP, given a = 8, $a_n = 62$, $S_n = 210$, find n and d.

39. Mayank made a bird-bath for his garden in the shape of a cylinder with a hemispherical depression at one end (see the below figure). The height of the cylinder is 1.45 m and its radius is 30 cm. Find the toal surface area of the bird-bath.

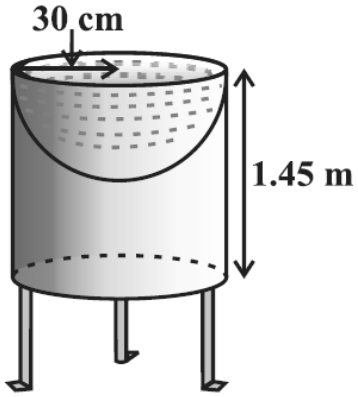

OR

A solid consisting of a right circular cone of height 120 cm and radius 60 cm standing on a hemisphere of radius 60 cm is placed upright in a right circular cylinder full of water such that it touches the bottom. Find the volume of water left in the cylinder, if the radius of the cylinder is 60 cm and its height is 180 cm.

40. Following is the age distribution of a group of students. Draw the cumulative frequency curve less than type and hence obtain the median from the graph.

Age(in years)	4-5	5-6	6-7	7-8	8-9	9-10	10-11	11-12	12-13	13-14	14-15	15-16
No. of students	36	42	52	60	68	84	96	82	66	48	50	16